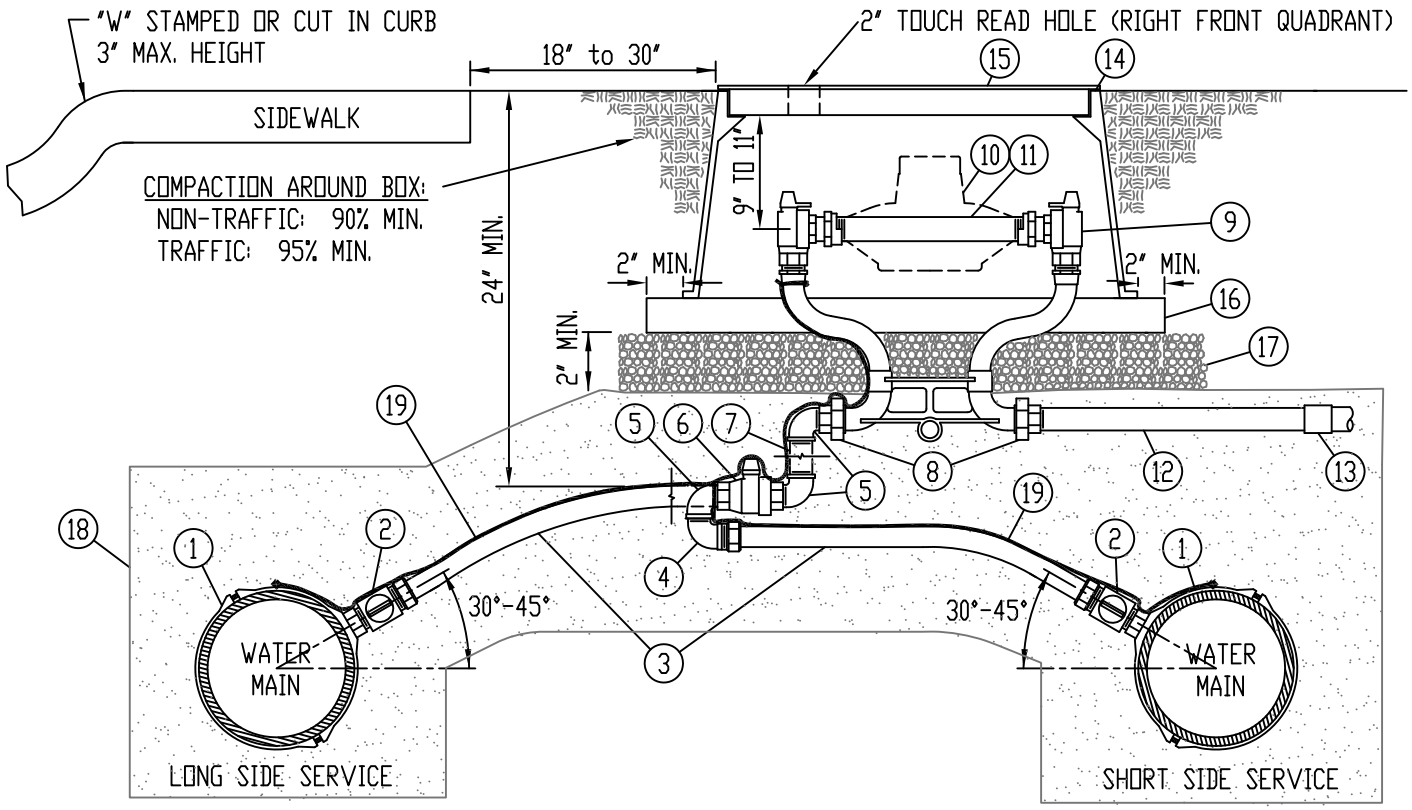

CARSON 1220-4B "T" TYPE LID:
SHALL INCLUDE STRAIGHT TYPE HEXAGON LOCK-DOWN BOLT (1) AND TOUCH READ HOLE. SHALL BE MARKED "WATER"

CHRISTY FL30P RECESSED LID:
SHALL INCLUDE STRAIGHT TYPE PENTAHEAD LOCK-DOWN BOLTS (2) AND NEPTUNE OFFSET AMR HOLE, SHALL BE MARKED "WATER"

METER YOKE:
FORD, JONES, MUELLER, McDONALD

1	1" BRONZE SADDLE - IPT	9	1" COPPER/BRASS METER YOKE - 12" HEIGHT w/2 FULL PORT ANGLE BALL VALVES INCLUDING PADLOCK WINGS ON INLET AND OUTLET		
2	1" CORPORATION STOP - FULL-PORT BALL, MIP x IPS COMP w/ STAINLESS STEEL INSERT (1" CTS INSERT-52)	10	1" WATER METER (BY DISTRICT)		
3	1 1/4" POLYETHYLENE TUBING - CTS ENDOPORE PE-4710 SODR 9 (250 PSI) OR EQUAL	11	PVC METER IDLER - 1 1/4" x 10 3/4", SCH 80 (BY CONTRACTOR)		
		12	1" x 18" PVC NIPPLE - SCH 80 (BRASS IF BACKFLOW)		
4	1" BRASS STREET ELBOW - IPS COMP x MIP w/ STAINLESS STEEL INSERT (1" CTS INSERT-52)	13	1" PVC COUPLING - SCH80		
				NON-TRAFFIC AREAS	TRAFFIC AREAS
5	1" BRASS STREET ELBOW	14	METER BOX	CARSON 1220-12	CHRISTY FL30TBOX12
6	1" VALVE - FULL-PORT BALL, FIP x FIP or IPS COMP x FIP w/ STAINLESS STEEL INSERT (1" CTS INSERT-52)	15	LID	CARSON 1220-4B	CHRISTY FL30P
		16	2" x 6" PRESSURE TREATED DOUGLAS FIR SUPPORTS (2)		
7	1" BRASS NIPPLE (AS NECESSARY TO ADJUST TO PROPER GRADE)	17	3/4" CLEAN CRUSHED ROCK		
		18	#2 WASHED SAND COMPACTED TO 90%		
8	1" DUAL PURPOSE CONNECTION	19	#10 INSULATED COPPER LOCATOR WIRE		

CITRUS HEIGHTS WATER DISTRICT

1 1/4" POLYETHYLENE WATER SERVICE - 1" WATER METER NEW CONSTRUCTION

CITRUS HEIGHTS WATER DISTRICT

DRAWN: 25 SEP 2014
REVISED: 15 APR 2021

APPROVED BY: Melissa Pieri
CITRUS HEIGHTS WATER DISTRICT
DATE: APRIL 15, 2021

SCALE: N.T.S.
DESIGN: P.A.D.
CAD FILE: WS_125PE.DWG
PAGE: *WS_125PE*